Hy-Q International

Quartz Crystal Filter
Product Guide

Application

Quartz crystal filters are the optimum choice where the application requires selective narrow band filtering at HF and VHF frequencies. Because of the extremely high Q of quartz resonators, crystal filters with a fractional bandwidth of the order of 0.01% to 0.5% can be realised with low insertion loss and high selectivity. Hy-Q International employs modern computer aided design techniques covering conventional crystal filter realisations and polylithic realisations. The conventional approach, utilising discrete crystal resonators, is employed at low frequencies and where the selectivity or bandwidth requirements are such that complex realisations are necessary, as in HF SSB filters. The polylithic approach, using cascaded monolithic dual filter elements, is used at higher frequencies where the selectivity and bandwidth requirements allow.

Terms and Definitions

Reference Frequency: a frequency defined by specification to which other frequencies may be referred. Normally, the reference frequency indicates the centre frequency (fo), the carrier frequency (fc) in SSB filters.

Relative Attenuation: the difference between the attenuation at a given frequency and the minimum attenuation in the pass band or the attenuation at the reference frequency.

Pass Band: bands of frequencies B1(kHz) in which the relative attenuation is equal or less than a specific value A1(dB).

Pass Bandwidth: the separation of frequencies between which the relative attenuation is equal to or less than a specific value A1(dB).

Pass Band Ripple: R(dB) the greatest difference between the maximum and the minimum attenuation within a pass band.

Insertion Loss: L(dB) for a specified frequency, the attenuation resulting from the insertion of a filter into a transmission system , i.e. the logarithmic ratio of the power delivered to the load before insertion of the filter to the power delivered to the load after insertion of the filter. The term 'Insertion Loss' is often loosely used to refer to the minimum value of the attenuation in the pass band.

Stop Band: band(s) of frequencies in which the relative attenuation is equal or greater than the specified minimum values.

Stop Bandwidth: the separation of frequencies B2 and B3 kHz at which the relative attenuation first exceeds the specified minimum values A2 and A3 (dB) respectively.

Spurious Response Attenuation: the minimum attenuation A4(dB) guaranteed for spurious response in the stop band. Spurious responses usually occur at frequencies higher than the centre frequency.

Attenuation Guaranteed: the minimum attenuation A2 or A3(dB) guaranteed in specific frequency ranges.

Terminating Impedances: the impedance presented to the filter by the source and load, usually expressed in terms of a parallel combination of resistance and capacitance.

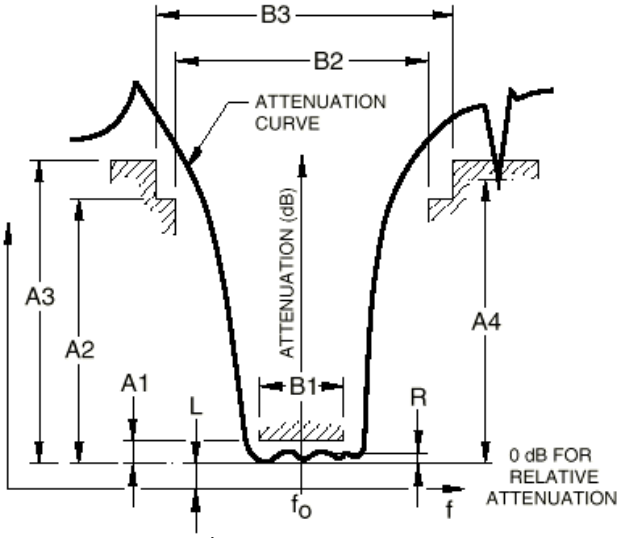

Filter Response Curve

Ordering Information

Where possible, filters for a given application should be selected from the Standard Range, and ordered by quoting the appropriate filter type. If the application is such that a custom filter is required, then our engineers are available to discuss the specification and to obtain the best compromise between performance and the unavoidable cost of design and development.

Standard Filters:
Hy-Q International offer a range of standard filters which cover the most common applications.
These all fall into the following groups:

- Channel Filters
- Filters for HF applications
- Filters for VHF applications
- LC Filters

Full details of these are given in the individual data sheets.

Non-Standard Requirements:
The following is the minimum information required for the specification for a non-standard filter.

FILTER APPLICATION: Low Pass_____ High Pass_____ Band Pass_____ SSB_____ Other_____

REFERANCE FREQUENCY (fo): _____ kHz

PASS BANDWIDTH: _____ dB @ ± _____ kHz

Ripple_____ dB Max. Insertion Loss_____ dB Max.

STOP BANDWIDTH(S): _____ dB @ ± _____ kHz

_____ dB @ ± _____ kHz

GUARANTEED ATTUATION: _____ dB @ ± _____ kHz

SOURCE IMPEDANCE: _____ ohm // _____ pF

LOAD IMPEDANCE: _____ ohm // _____ pF

OPERATING TEMPERATURE RANGE: _____ °C _____ °C

PACKAGE STYLE: _____ or SIZE L_____ W_____ H_____

10.7 MHz Channel Filters

Type	Pole	Pass Bandwidth	Stop Bandwidth		Ripple Max	Loss Max	Attenuation Guaranteed	Terminating Impedance	Temp. Range	Package
		dB @ kHz	dB@kHz	dB@kHz	dB	dB	dB @ (fo ±kHz)	ohms / pF	ºC	
12.5 kHz CHANNEL SPACING										
QMF 10741	2	3±3.75	18±12.5		1.0	2.0	35+300 ~ +1000 35-300 ~ -1000	3.3k / 2.5	-40 - +80	QC53
QMF 10743	2	3±3.75	20±18.0		0.5	1.5	35+300 ~ +1000 35-300 ~ -1000	1.8k / 6.0	-20 - +70	QC59
QMF 10744	4	3±3.75	40±14.0		1.0	2.5	50+300 ~ +1000 70-200 ~ -1000	1.8k / 5.0	-20 - +70	QC59 x2
QMF 10750	4	3±3.75	40±14.0		1.0	2.5	50+300 ~ +1000 70-200 ~ -1000	3.0k / 2.0	-20 - +70	QC59 x2
QMF 10745	6	3±3.75	45±8.75	65±12.5	2.0	3.5	65±12.5 ~ ±300	1.8k / 5.0	-20 - +70	QFP10
QMF 10742	6	3±3.75	50±8.75	65±12.5	2.0	3.0	65±12.5 ~ ±300	3.3k / 2.5	-40 - +80	QFP10
QMF 10749	8	3±3.75	65±8.75	90±12.5	2.0	4.0	90±12.5 ~ ±300	1.8k / 5.0	-20 - +70	QFP11
QMF 10718	8	3±3.75	70±8.75	90±12.5	2.0	4.5	90±12.5 ~ ±300	910 / 25	-40 - +80	QFP7
QMF 10725	8	3±3.75	70±8.75	90±12.5	2.0	4.5	90±12.5 ~ ±300	910 / 25	-20 - +70	QFP9
QMF 10726	8	3±3.75	70±8.75	90±12.5	2.0	4.5	90±12.5 ~ ±300	3.3k / 2.5	-20 - +70	QFP11
QMF 10732	8	3±3.75	70±8.75	90±12.5	2.0	4.5	90±12.5 ~ ±300	470 / 25	-40 - +80	QFP7
QMF 10758	8	3±3.75	65±8.75	90±12.5	1.0	2.0	90±12.5 ~ ±300	3.3k / 2.5	-20 - +70	QFP11
QMF 10762	8	3±3.75	70±8.75	90±12.5	2.0	4.5	90±12.5 ~ ±300	820 / 10	-20 - +70	QFP9
QMF 10767	8	3±3.75	70±8.75	90±12.5	2.0	4.5	90±12.5 ~ ±300	910 / 25	-20 - +70	QFP9
QMF 10770	8	3±3.75	70±8.75	90±12.5	2.0	4.5	90±12.5 ~ ±300	3.3k / 2.5	-20 - +70	QFP11
QMF 10739	10	3±3.75	90±8.75		2.0	4.5	90±8.75 ~ ±300	3.3k / 2.5	-20 - +70	QFP12
20 kHz CHANNEL SPACING										
QMF 10746	2	3±6.0	18±20.0		1.0	2.0	35+300 ~ +1000 40-200 ~ -1000	3.3k / 2.0	-40 - +80	QC53
QMF 10751	4	3±6.0	40±20.0		1.0	2.5	50+300 ~ +1000 70-200 ~ -1000	3.3k / 1.5	-20 - +70	QC59 x2
QMF 10747	6	3±6.0	50±14.0	65±20.0	2.0	3.0	65±20.0 ~ ±300	3.3k / 2.0	-20 - +70	QFP10
QMF 10738	8	3±6.0	70±14.0	90±20.0	2.0	3.5	90±20.0 ~ ±300	910 / 25	-20 - +70	QFP9
QMF 10740	8	3±6.0	70±14.0	90±20.0	2.0	3.5	90±20.0 ~ ±300	910 / 25	-20 - +70	QFP7
QMF 10748	8	3±6.0	70±14.0	90±20.0	2.0	3.5	90±20.0 ~ ±300	3.3k / 2.0	-40 - +80	QFP11
25 kHz CHANNEL SPACING										
QMF 10752A	2	3±7.5	18±25.0		0.5	1.5	35+300 ~ +1000 40-200 ~ -1000	3.0K / 2.0	-20 - +70	QC59
QMF 10752	2	3±7.5	18±25.0		1.0	2.0	35+300 ~ +1000 40-200 ~ -1000	3.3k / 1.5	-40 - +80	QC53
QMF 10771	4	3±7.5	40±25.0		1.0	2.5	40±25.0 ~ ±300	3.0k / 0	-40 - +80	QC53 x2
QMF 10772	4	3±7.5	40±25.0		1.0	2.5	65+300 ~ +1000 85-200 ~ -1000	3.0k / 1.5	-40 - +80	QC53 x2
QMF 10766	4	3±10.0	30±25.0	45±35.0	0.5	3.0	45±35.0 ~ ±300	910 / 25	-40 - +80	QFP9
QMF 10765	6	3±11.5	45±25.0	60±35.0	1.0	3.5	60±35.0 ~ ±300	910 / 25	-40 - +80	QFP9
QMF 10753	6	3±7.5	50±17.5	65±25.0	2.0	3.0	65±25.0 ~ ±300	3.3k / 1.5	-40 - +80	QFP10
QMF 10712	8	3±7.5	65±17.5	90±25.0	2.0	3.5	90±25.0 ~ ±300	3.3k / 1.5	-40 - +80	QFP11
QMF10712A	8	6±7.5	60±15.0	90±25.0	2.0	4.0	90±25.0 ~ ±300	3.0k / 0	-20 - +70	QFP11
QMF 10713	8	3±7.5	80±22.5	90±25.0	2.0	3.5	90±25.0 ~ ±300	910 / 25	-20 - +70	QFP9
QMF 10716	8	6±7.5	80±25.0		2.0	3.5	80±25.0 ~ ±300	820 / 0(1) 820 / 25(0)	-20 - +70	QFP9
QMF 10719	8	3±7.5	70±17.5	90±25.0	2.0	3.5	90±25.0 ~ ±300	910 / 25	-40 - +80	QFP7
QMF 10729	8	3±7.5	70±17.5	90±25.0	2.0	3.5	90±25.0 ~ ±300	910 / 25	-40 - +80	QFP9
QMF 10730	8	3±7.5	70±17.5	90±25.0	2.0	3.5	90±25.0 ~ ±300	470 / 25	-40 - +80	QFP7
QMF 10735	8	3±7.5	80±22.5	90±25.0	2.0	3.5	90±25.0 ~ ±300	910 / 25	-20 - +70	QFP9
QMF 10737	8	3±7.5	75±18.0	90±25.0	2.0	3.5	90±25.0 ~ ±300	910 / 25	-40 - +80	QFP7
QMF 10757	8	3±7.5	70±17.5	90±25.0	2.0	3.5	90±25.0 ~ ±300	910 / 25	-40 - +80	QFP7
QMF 10761	8	3±7.5	80±22.5	90±25.0	2.0	3.5	90±25.0 ~ ±300	820 / 10	-20 - +70	QFP9
QMF 10736	10	3±7.5	90±17.5		2.0	4.0	90±17.5 ~ ±300	3.0k / 0	-20 - +70	QFP12
34 kHz CHANNEL SPACING										
QMF 10M20A	2	3±10.0	18±34.0		0.5	1.5	35+300 ~ +1000 40-200 ~ -1000	3.9k / 2.0	-20 - +70	QC59
QMF 10M20B	4	3±10.0	40±34.0		1.0	2.5	50+300 ~ +1000 70-200 ~ -1000	3.9k / 2.0	-20 - +70	QC59 x2

Note: The above specifications are typical only. Please contact our Sales Department for specific requirements.

21.4 MHz Channel Filters

Type	Pole	Pass Bandwidth	Stop Bandwidth		Ripple Max	Loss Max	Attenuation Guaranteed	Terminating Impedance	Temp. Range	Package
		dB@kHz	dB@kHz	dB@kHz	dB	dB	dB @ (fo±kHz)	ohms / pF	°C	
12.5 kHz CHANNEL SPACING										
QMF 21407	2	3±3.75	20 ±18.0		0.5	1.5	35+350 ~ +1000 50-200 ~ -1000	850 / 8.0	-20 - +70	QC44
QMF 21406	4	3±3.75	40 ±14.0		1.0	2.5	65+350 ~ +1000 80-200 ~ -1000	850 / 6.5	-20 - +70	QC44 x2
QMF 21404	6	3±3.75	45 ±8.75	65 ±12.5	2.0	3.0	65±12.5 ~ ±300	850 / 6.0	-20 - +70	QFP22
QMF 21405	8	3±3.75	65 ±9.0	90 ±12.5	2.0	4.0	90±12.5 ~ ±300	850 / 6.0	-20 - +70	QFP23
QMF 21408	6	3±3.75	45 ±8.75	65 ±12.5	2.0	3.0	65±12.5 ~ ±300	850 / 6.0	-20 - +70	QFP10
QMF 21409	8	3±3.75	65 ±9.0	90 ±12.5	2.0	4.0	90±12.5 ~ ±300	850 / 6.0	-20 - +70	QFP11
QMF 21410	8	3±3.75	65 ±9.0	90 ±12.5	2.0	4.0	90±12.5 ~ ±300	910 / 3.0	-20 - +70	QFP11
QMF 21411	2	3±3.75	20 ±18.0		0.5	1.5	35+350 ~ +1000 50-200 ~ -1000	1.6k / 2.0	-20 - +70	QC44
QMF 21412	4	3±3.75	40 ±14.0		1.0	2.5	65+350 ~ +1000 80-200 ~ -1000	1.6k / 2.0	-20 - +70	QC44 x2
QMF 21413	6	3±3.75	45 ±8.75	65 ±12.5	2.0	3.0	65±12.5 ~ ±300	1.6k / 3.0	-20 - +70	QFP22
QMF 21414	8	3±3.75	65 ±9.0	90 ±12.5	2.0	4.0	90±12.5 ~ ±300	1.6k / 2.0	-20 - +70	QFP23
QMF 21415	6	3±3.75	45 ±8.75	65 ±12.5	2.0	3.0	65±12.5 ~ ±300	1.6k / 3.0	-20 - +70	QFP10
QMF 21416	8	3±3.75	65 ±9.0	90 ±12.5	2.0	4.0	90±12.5 ~ ±300	1.6k / 2.0	-20 - +70	QFP11
20 kHz CHANNEL SPACING										
QMF 21430	2	3±6.0	20±25.0		0.5	1.5	35+350 ~ +1000 50-200 ~ -1000	1.2k / 2.5	-20 - +70	QC44
QMF 21431	4	3±6.0	40±20.0		1.0	2.5	65+350 ~ +1000 80-200 ~ -1000	1.2k / 2.5	-20 - +70	QC44 x2
QMF 21436	6	3±6.0	45±14.0	65±20.0	2.0	2.5	65±20.0 ~ ±300	1.2k /2.5	-20 - +70	QFP22
QMF 21434	8	3±6.0	65±14.0	90±20.0	2.0	3.0	90±20.0 ~ ±300	1.2k / 2.5	-20 - +70	QFP23
QMF 21432	6	3±6.0	45±14.0	65±20.0	2.0	2.5	65±20.0 ~ ±300	1.6k / 1.0	-20 - +70	QFP22
QMF 21433	6	3±6.0	45±14.0	65±20.0	2.0	2.5	65±20.0 ~ ±300	1.6k / 1.0	-20 - +70	QFP10
QMF 21435	8	3±6.0	65±14.0	90±20.0	2.0	3.0	90±20.0 ~ ±300	1.2k / 2.5	-20 - +70	QFP11
25 kHz CHANNEL SPACING										
QMF 21446	2	3±7.5	18±25.0		1.0	2.0	35+350 ~ +1000 50-200 ~ -1000	1.6k / 2.0	-40 - +80	QC44
QMF 21446A	2	3±7.5	18±25.0		0.5	1.5	35+350 ~ +1000 50-200 ~ -1000	1.5k / 2.0	-20 - +70	QC44
QMF 21447	4	3±7.5	40±25.0		1.0	2.0	65+350 ~ +1000 80-200 ~ -1000	1.5k / 2.0	-40 - +80	QC44 x2
QMF 21448	4	3±7.5	40±25.0		1.0	2.0	65+300 ~ +1000 85-200 ~ -1000	1.5k / 2.0	-40 - +80	QC44 x2
QMF 21444A	6	3±7.5	45±17.5	65±25.0	2.0	2.5	65±25.0 ~ ±300	1.5k / 2.0	-20 - +70	QFP22
QMF 21443	6	3±7.5	50±17.5	65±25.0	2.0	3.0	65±25.0 ~ ±300	1.6k / 2.0	-40 - +80	QFP10
QMF 21444	6	3±7.5	50±17.5	65±25.0	2.0	3.0	65±25.0 ~ ±300	1.6k / 2.0	-40 - +80	QFP22
QMF 21445A	8	3±7.5	65±17.5	90±25.0	2.0	3.0	90±25.0 ~ ±300	1.5k / 2.0	-20 - +70	QFP23
QMF 21441	8	3±7.5	70±17.5	90±25.0	2.0	3.5	90±25.0 ~ ±300	910 / 15	-40 - +80	QFP9
QMF 21442	8	3±7.5	70±17.5	90±25.0	2.0	3.5	90±25.0 ~ ±300	1.6k / 2.0	-40 - +80	QFP11
QMF 21445	8	3±7.5	70±17.5	90±25.0	2.0	3.5	90±25.0 ~ ±300	1.6k / 2.0	-40 - +80	QFP23
QMF 21449	8	3±7.5	60±15.5	80±20.0	2.0	4.0	80±20.0 ~ ±300	1.0k / 1.0	-20 - +70	QFP11
34 kHz CHANNEL SPACING										
QMF 21M20A	2	3±10.0	18±34.0		0.5	2.0	35+350 ~ +1000 50-200 ~ -1000	1.8k / 1.5	-20 - +70	QC44
QMF 21M20B	4	3±10.0	40±34.0		1.0	2.5	65+350 ~ +1000 80-200 ~ -1000	1.8k / 1.5	-20 - +70	QC44 x2
QMF 21450	8	3±11.0	70±25.0	80±35.0	2.0	3.5	80±35.0 ~ ±300	1.6k / 2.0	-20 - +70	QFP11
50 kHz CHANNEL SPACING										
QMF 21M30A	2	3±15.0	15±45.0		0.5	1.5	35+350 ~ +1000 45-200 ~ -1000	3.0k / 0.5	-20 - +70	QC44
QMF 21M30B	4	3±15.0	40±50.0		1.0	2.5	65+350 ~ +1000 80-200 ~ -1000	3.0k / 0.5	-20 - +70	QC44 x2

Note: The above specifications are typical only. Please contact our Sales Department for specific requirements.

Crystal Filters

Hy-Q

16.9 MHz Channel Filters

Type	Pole	Pass Bandwidth dB @ kHz	Stop Bandwidth dB @ kHz	Stop Bandwidth dB @ kHz	Ripple Max dB	Loss Max dB	Attuation Guaranteed dB @ (fo ±kHz)	Terminating Impediance ohms / pF	Temp. Range °C	Package
25 kHz CHANNEL SPACING										
QMF 16M15A	2	3±7.5	18±25.0		0.5	1.5	35+300 ~ +1000 40-200 ~ -1000	1.8k / 2.0	-20 - +70	QC59
QMF 16M15B	4	3±7.5	40±25.0		1.0	2.5	50+300 ~ +1000 70-200 ~ -1000	1.8k / 2.0	-20 - +70	QC59 x2

45.0 MHz Channel Filters

Type	Pole	Pass Bandwidth dB @ kHz	Stop Bandwidth dB @ kHz	Stop Bandwidth dB @ kHz	Ripple Max dB	Loss Max dB	Attuation Guaranteed dB @ (fo ±kHz)	Terminating Impediance ohms / pF	Temp. Range °C	Package
FUNDAMENTAL MODE										
QMF 45F15A	2	3±7.5	15±25.0		1.0	2.0	40+500 ~ +1000 40-200 ~ -1000	650 / 4.5	-20 - +70	QC44
QMF 45F20A	2	3±10.0	15±30.0		1.0	2.0	40+500 ~ +1000 40-200 ~ -1000	700 / 1.5	-20 - +70	QC44
QMF 45F30A	2	3±15.0	15±50.0		1.0	2.0	35+500 ~ +1000 35-200 ~ -1000	800 / 3.0	-20 - +70	QC44
QMF 45F15B	4	3±7.5	30±25.0		1.0	2.0	70+500 ~ +1000 70-200 ~ -1000	650 / 1.5	-20 - +70	QC44 x2
QMF 45F20B	4	3±10.0	40±48.0		1.0	3.0	70+500 ~ +1000 70-200 ~ -1000	700 / 1.0	-20 - +70	QC44 x2
QMF 45F30B	4	3±15.0	40±60.0		1.0	3.0	70+500 ~ ±1000 70-200 ~ -1000	800 / 3.0	-20 - +70	QC44 x2
THIRD OVERTONE										
QMF 45M15A	2	3±7.5	15±30.0		1.0	2.0	40+500 ~ +1000 40-200 ~ -1000	3.3k / 1.0	-20 - +70	QC44
QMF 45M20A	2	3±10.0	15±35.0		1.0	2.0	40+500 ~ +1000 40-200 ~ -1000	5.5k / 1.0	-20 - +70	QC44
QMF 45M15B	4	3±7.5	25±25.0		1.0	3.0	70+500 ~ +1000 70-200 ~ -1000	3.3k / 1.0	-20 - +70	QC44 x2
QMF 45M20B	4	3±10.0	35±40.0		1.0	3.0	70+500 ~ +1000 70-200 ~ -1000	5.5k / 1.0	-20 - +70	QC44 x2

70.0 MHz Channel Filters

Type	Pole	Pass Bandwidth dB @ kHz	Stop Bandwidth dB @ kHz	Stop Bandwidth dB @ kHz	Ripple Max dB	Loss Max dB	Attenuation Guaranteed dB @ (fo±kHz)	Terminating Impedance ohms / pF	Temp. Range °C	Package
QMF 70M15A	2	3±7.5	15±30.0		1.0	3.0	35+500 ~ +1000 35-200 ~ -1000	2.5k / 1.0	-20 - +70	QC44
QMF 70M20A	2	3±10.0	15±30.0		1.0	2.0	35+500 ~ +1000 35-200 ~ -1000	2.5k / 1.0	-20 - +70	QC44
QMF 70M15B	4	3±7.5	25±25.0		1.0	3.0	70+500 ~ +1000 70-200 ~ -1000	2.5k / 1.0	-20 - +70	QC44 x2
QMF 70M20B	4	3±10.0	35±40.0		1.0	3.0	70+500 ~ +1000 70-200 ~ -1000	2.5k / 1.0	-20+70	QC44 x2

90.0 MHz Channel Filters

Type	Pole	Pass Bandwidth dB @ kHz	Stop Bandwidth dB @ kHz	Stop Bandwidth dB @ kHz	Ripple Max dB	Loss Max dB	Attenuation Guaranteed dB @ (fo±kHz)	Terminating Impedance ohms / pF	Temp. Range °C	Package
QMF 90M15A	2	3±7.5	15±30.0		1.0	2.0	35+500 ~ +1000 35-200 ~ -1000	1.5k / 1.0	-20 - +70	QC44
QMF 90M20A	2	3±10.0	15±30.0		1.0	2.0	35+500 ~ +1000 35-200 ~ -1000	1.5k / 1.0	-20 - +70	QC44
QMF 90M15B	4	3±7.5	35±38.0		1.0	3.0	70+500 ~ +1000 70-200 ~ -1000	1.5k / 1.0	-20 - +70	QC44 x2
QMF 90M20B	4	3±10.0	35±40.0		1.0	3.0	70+500 ~ +1000 70-200 ~ -1000	1.5k / 1.0	-20 - +70	QC44 x2

Note: The above specifications are typical only. Please contact our Sales Department for specific requirements.

Crystal Filters

Hy-Q

Filters for HF, SSB and VHF Applications

Type	Application	Pass Bandwidth	Stop Bandwidth		Ripple Max	Loss Max	Carrier Rejection	Terminating Impedance	Temperature Range	Package
		dB @ kHz	dB @ kHz	dB @ kHz	dB	dB	dB MIN	ohms / pF	°C	
1.4 MHz HF FILTERS										
QF 01401	LSB	4-2.7 ~ -.35	20 0.0 40+0.15	60-3.4 ~ +.4	2.0	4.0	20	1k / 15	-15 to +55	QFP16
QF 01403	CW	3±0.5	60±3.50		2.0	4.0		1k / 15	-15 to +55	QFP16
QF 01405	LSB	4+2.7 ~ -.35	20 0.0 40-3.5 ~ +0.15	60-3.7 ~ +.4	2.0	4.0	20	1k / 15	-15 to +55	QFP16
QF 01406	USB	4+.35 ~ +2.7	60+3.7 ~ -0.4		2.0	4.0	20	1k / 15	-15 to +55	QFP16
QF 01408	BP	4±1.5	30±3.5	60±6.0	2.0	6.0		1k / 15	-15 to +55	QFP16
QF 01409	AM	4±0.5	60±2.0		2.0	6.0		1k / 15	-15 to +55	QFP16
QF 01410	CW	3±0.1	16±0.2 30±1.0	60±2.0	2.0	4.0		1k / 15	-15 to +55	QFP16
QF 01411	AM	3±0.15	60±0.4		2.0	5.0		50 / 0	-15 to +55	QFP16
QF 01412	AM	3±0.3	60±0.75		2.0	5.0		50 / 0	-15 to +55	QFP16
QF 01413	AM	3±0.75	60±1.9		2.0	5.0		50 / 0	-15 to +55	QFP16
QF 01414	AM	3±0.2	60±0.5		2.0	6.0		1k / 15	-15 to +55	QFP16
QF 01417	TELEX	3±.125	6±0.2 30±0.5	60±1.2	2.0	4.0		1k / 15	-15 to +55	QFP16
QF 01418	TELEX	3±.085 5±.125	6±0.17 30±0.38	60±0.5 66±0.55	1.0	5.0		1k / 15	-15 to +55	QFP16
QF 01419	TELEX	4±0.25	30±1.0	60±2.0	3.0	4.0		1k / 15	-15 to +55	QFP16
QF 01420	LSB	3-3.4 ~ -0.3	50-5.0 ~ +0.3	60-7.0 ~ +0.45	1.5	6.0		50 / 0	-15 to +55	QFP16
QF 01421	USB	3+0.3 ~ +3.4	50-0.3 ~ +5.0	60-0.45 ~ +7.0	1.5	6.0		50 / 0	-15 to +55	QFP16
QF 01422	DSB	3±3.0	60±14.0		2.0	6.0		50 / 0	-15 to +55	QFP16
QF 01423	DSB	5±2.7	20±6.0	60±12.0	2.0	6.0		1k / 15	-15 to +70	QFP16
QF 01425	LSB	3-2.3 ~ -1.1	60-3.4 ~ +0.05	30-2.9 ~ -0.5	2.0	6.0		1k / 15	-10 to +55	QFP16
QF 01426	USB	3+0.3 ~ +3.0	60-0.4 ~ +4.1		2.0	6.0		1k / 15	-10 to +55	QFP16
QF 01427	LSB	3-3.0 ~ -0.3	60-4.1 ~ +0.4		2.0	6.0		1k / 15	-10 to +55	QFP16
QF 01428	LSB	3-1.95 ~ -1.45	30-2.3 ~ -1.1	60-2.7 ~ -0.7	2.0	6.0		1k / 15	-10 to +55	QFP16
QF 01429	LSB	3-1.9 ~ -1.1	60-2.3 ~ -0.65		2.0	4.0		1k / 15	-15 to +55	QFP16
QF 01430	CW	3±0.1	60±0.3		3.0	5.0		50 / 0	-10 to +80	QFP16
QF 01431	CW	3±0.4	60±1.0		3.0	5.0		50 / 0	-10 to +80	QFP16
QF 01436	LSB	2-3.4 ~ -0.3	60-4.0 ~ +0.3		2.0	5.0		50 / 0	-10 to +60	QFP16
QF 01447	USB	4+0.35 ~ +2.7	60-0.4 ~ +3.7		2.0	4.0		50 / 0	-15 to +55	QFP16
QF 01448	LSB	4-2.7 ~ -0.35	20 0.0 35+3.1	40 ±0.15 60-3.4 ~ +0.4	2.0	4.0	20	50 / 0	-15 to +55	QFP16
QF 01449	DSB	3±2.7	30 ±8.0	60±10.0	2.0	6.0		50 / 0	-15 to +55	QFP16
QF 01453	USB	6+0.35 ~ +2.7	20+3.2 40+0.15 ~ +3.3	60+0.5 ~ +3.4	2.0	6.0		1k / 15	-15 to +55	QFP16
QF 01456	LSB	4-2.7 ~ -0.35	20-3.2	60-3.4 ~ +0.4	2.0	6.0		1k / 15	-15 to +55	QFP16
1.65 MHz HF FILTERS										
QF 01601	DSB	6 ±3.0	60 ±14.0		2.0	3.5		1k / 100	0 to +60	QFP3
QF 01602	LSB	6-2.8 ~ -0.3	70-5.0 ~ +1.0		2.0	3.5	20	1k / 100	0 to +60	QFP3
QF 01606	USB	6+0.3 ~ +2.8	70-5.0 ~ +5.0		2.0	3.5	20	1k / 100	0 to +60	QFP3
QF 01607	LSB	6-3.1 ~ -0.3	70-5.0 ~ +1.0		2.0	3.5	20	1k / 100	0 to +60	QFP3
QF 01608	USB	6+0.3 ~ +3.0	70+5.0 ~ +1.0		2.0	3.5	20	10k / 7.0	0 to +60	QFP3
QF 01609	LSB	6-3.0 ~ -0.3	70+5.0 ~ +1.0		2.0	3.5	20	10k / 7.0	0 to +60	QFP3
QF 01610	USB	6+0.3 ~ +3.1	70-1.0 ~ +5.0		2.0	3.5	20	1k / 100	0 to +60	QFP3
QF 01612	LSB	6-2.6 ~ -0.3	70-5.0 ~ +1.0		2.0	3.5	20	1k / 100	0 to +60	QFP3
5.0 MHz SSB FILTERS							**Ref Freq MHz**			
QF 05051	SSB	6 0 ~ -3.0	60-4.6 ~ +1.6		1.0	3.0	5.050	50 / 0	0 to +50	QFP7
QF 05052	SSB	6 0 ~ +3.0	60-1.6 ~ +4.6		1.0	3.0	5.050	50 / 0	0 to +50	QFP7
9.0 MHz SSB FILTERS							**Ref Freq MHz**			
QF 09002	SSB	6±1.2	80±2.15	80±2.65	2.0	3.5	9.000	500 / 30	0 to +50	QFP7
QF 09006	SSB	6±7.5	80±16.5		2.0	3.5	9.000	1.2k / 30	0 to +50	QFP7
12.7 MHz SSB FILTERS							**Ref Freq MHz**			
QMF 12701	LSB	6-3.0 ~ -0.5	26-3.75 60-4.75 ~ +1.3		2.0	5.0	12.700	200 / 7(1) 3k / 7(0)	-30 to +60	QFP27
QMF 12702	USB	6+0.5 ~ +3.0	26+3.75 60-1.3 ~ +4.75		2.0	5.0	12.700	200 / 7(1) 3k / 7(1)	-30 to +60	QFP27
35.0 MHz VHF FILTERS							**Ref Freq MHz**			
QF 35401	AM/FM 25 kHz	3±3.5	25±12.0		1.0	3.0	35.3965	50 / 0	0 to +50	QFP9
45.0 MHz VHF FILTERS							**Ref Freq MHz**			
QF 45001	AM/FM 25 kHz	3±2.7	20±6.0 60±10.0	66±11.0	2.0	4.0	45.000	50 / 0	-15 to +55	QFP25
QF 45002	AM/FM 50 kHz	3±4.0	30±10.0	60±17.5	2.0	4.0	45.000	50 / 0	-15 to +55	QFP25

Note: The above specifications are typical only. Please contact our Sales Department for specific requirements.

Surface Mount Crystal Filters

Hy-Q

QSMF-1000 Surface Mount Filter

Series No.	Nominal Frequency (MHz)	Pole	Pass Bandwidth		Attenuation Bandwidth		Ripple (dB max.)	Loss (dB max.)	Attenuation Guaranteed		Terminal Impedance (ohm//pF)	Operating Temperature °C	Case Qty.
			(dB)	(kHz)	(dB)	(kHz)			(dB)	F0 ~ kHz			
21SM7A	21.400	2	3	±3.75	18	±18.0	1.0	1.5	50	-910 ±10	850 // 6.0	-20 ~ +70	1
21SM7B	21.400	4	3	±3.75	35	±14.0	1.0	2.5	80	-910 ±10	850 // 3.5	-20 ~ +70	2
21SM15A	21.400	2	3	±7.50	15	±25.0	1.0	1.5	50	-910 ±10	1500 // 2.0	-20 ~ +70	1
21SM15B	21.400	4	3	±7.50	35	±25.0	1.0	2.5	80	-910 ±10	1500 // 0.5	-20 ~ +70	2
21SM20A	21.400	2	3	±10.0	15	±34.0	1.0	2.0	50	-910 ±10	1800 // 0.5	-20 ~ +70	1
21SM20B	21.400	4	3	±10.0	35	±34.0	1.0	2.5	80	-910 ±10	1800 // -1.0	-20 ~ +70	2
21SM30A	21.400	2	3	±15.0	15	±45.0	1.0	1.5	45	-910 ±10	3000 // 0	-20 ~ +70	1
21SM30B	21.400	4	3	±15.0	35	±50.0	1.0	2.5	80	-910 ±10	3000 // -1.5	-20 ~ +70	2
45SM7A	45.000	2	3	±3.75	10	±12.5	1.0	2.5	65	-910 ±10	300 // 10	-20 ~ +70	1
45SM15A	45.000	2	3	±7.50	15	±25.0	1.0	2.0	40	-910 ±10	650 // 4.5	-20 ~ +70	1
45SM20A	45.000	2	3	±10.0	15	±34.0	1.0	2.0	40	-910 ±10	700 // 2.5	-20 ~ +70	1
45SU30A	45.000	2	3	±15.0	15	±50.0	1.0	2.0	35	-910 ±10	800 // 1.5	-20 ~ +70	1

QSMF-2000 Surface Mount Filter

Series No.	Nominal Frequency (MHz)	Pole	Pass Bandwidth		Attenuation Bandwidth		Ripple (dB max.)	Loss (dB max.)	Attenuation Guaranteed		Terminal Impedance (ohm//pF)	Operating Temperature °C	Case Qty.
			(dB)	(kHz)	(dB)	(kHz)			(dB)	F0 ~ kHz			
21SH7A	21.400	2	3	±3.75	18	±18.0	1	1.5	50	-910 ±10	Please contact us to discuss Impedance with our Sales Department	-20 ~ +70	1
21SH7B	21.400	4	3	±3.75	35	±14.0	1	2.5	80	-910 ±10		-20 ~ +70	2
21SH15A	21.400	2	3	±7.5	15	±25.0	1	1.5	50	-910 ±10		-20 ~ +70	1
21SH15B	21.400	4	3	±7.5	35	±25.0	1	2.5	80	-910 ±10		-20 ~ +70	2
21SH20A	21.400	2	3	±10.0	15	±34.0	1	2.0	50	-910 ±10		-20 ~ +70	1
21SH20B	21.400	4	3	±10.0	35	±34.0	1	2.5	80	-910 ±10		-20 ~ +70	2
21SH30A	21.400	2	3	±15.0	15	±45.0	1	1.5	45	-910 ±10		-20 ~ +70	1
21SH30B	21.400	4	3	±15.0	35	±50.0	1	2.5	80	-910 ±10		-20 ~ +70	2
45SH7A	45.000	2	3	±3.75	10	±12.5	1	2.5	65	-910 ±10		-20 ~ +70	1
45SH15A	45.000	2	3	±7.50	15	±25.0	1	2.0	40	-910 ±10		-20 ~ +70	1
45SH20A	45.000	2	3	±10.0	15	±34.0	1	2.0	40	-910 ±10		-20 ~ +70	1
45SH30A	45.000	2	3	±15.0	15	±50.0	1	2.0	35	-910 ±10		-20 ~ +70	1

QSMF-3000 Surface Mount Filter

Series No.	Nominal Frequency (MHz)	Pole	Pass Bandwidth		Attenuation Bandwidth		Ripple (dB max.)	Loss (dB max.)	Attenuation Guaranteed		Terminal Impedance (ohm//pF)	Operating Temperature °C	Case Qty.
			(dB)	(kHz)	(dB)	(kHz)			(dB)	F0 ~ kHz			
21SU7A	21.400	2	3	±3.75	18	±18.0	1.0	1.5	50	-910 ±10	850 // 6.0	-20 ~ +70	1
21SU7B	21.400	4	3	±3.75	35	±14.0	1.0	2.5	80	-910 ±10	850 // 3.5	-20 ~ +70	2
21SU15A	21.400	2	3	±7.50	15	±25.0	1.0	1.5	50	-910 ±10	1500 // 2.0	-20 ~ +70	1
21SU15B	21.400	4	3	±7.50	35	±25.0	1.0	2.5	80	-910 ±10	1500 // 0.5	-20 ~ +70	2
21SU20A	21.400	2	3	±10.0	15	±34.0	1.0	2.0	45	-910 ±10	1800 // 0.5	-20 ~ +70	1
21SU20B	21.400	4	3	±10.0	35	±34.0	1.0	2.5	80	-910 ±10	1800 // -1.0	-20 ~ +70	2
21SU30A	21.400	2	3	±15.0	15	±45.0	1.0	1.5	45	-910 ±10	3000 // 0	-20 ~ +70	1
21SU30B	21.400	4	3	±15.0	35	±50.0	1.0	2.5	80	-910 ±10	3000 // -1.5	-20 ~ +70	2
45SU7A	45.000	2	3	±3.75	10	±12.5	1.0	2.5	65	-910 ±10	300 // 10	-20 ~ +70	1
45SU15A	45.000	2	3	±7.50	15	±25.0	1.0	2.0	40	-910 ±10	650 // 4.5	-20 ~ +70	1
45SU20A	45.000	2	3	±10.0	15	±34.0	1.0	2.0	40	-910 ±10	700 // 3.0	-20 ~ +70	1
45SU30A	45.000	2	3	±15.0	15	±50.0	1.0	2.0	35	-910 ±10	800 // 1.5	-20 ~ +70	1

Note: The above specifications are typical only. Please contact our Sales Department for specific requirements.

Surface Mount Crystal Filters

Hy-Q

QSMF-4000 Surface Mount Filter

Series No.	Nominal Frequency (MHz)	Pole	Pass Bandwidth		Attenuation Bandwidth		Ripple (dB max.)	Loss (dB max.)	Attenuation Guaranteed		Terminal Impedance (ohm//pF)	Operating Temperature °C
			(dB)	(kHz)	(dB)	(kHz)			(dB)	F0 ~ kHz		
21SR7B	21.400	4	3	±3.75	10	±25.0	1	2	70	-910 ±10	Please contact us to discuss Impedance with our Sales Department	-20 ~ +70
21SR15B	21.400	4	3	±7.50	10	±25.0	1	2	70	-910 ±10		-20 ~ +70
21SR30B	21.400	4	3	±15.0	10	±25.0	1	2	70	-910 ±10		-20 ~ +70
45SR7B	45.000	4	3	±3.75	10	±25.0	1	2	70	-910 ±10		-20 ~ +70
45SR15B	45.000	4	3	±7.50	10	±25.0	1	2	70	-910 ±10		-20 ~ +70
45SR30B	45.000	4	3	±15.0	10	±25.0	1	2	70	-910 ±10		-20 ~ +70
70SR7B	70.000	4	3	±3.75	10	±25.0	1	2	70	-910 ±10		-20 ~ +70
70SR15B	70.000	4	3	±7.50	10	±25.0	1	2	70	-910 ±10		-20 ~ +70
70SR30B	70.000	4	3	±15.0	10	±25.0	1	2	70	-910 ±10		-20 ~ +70
73SR7B	73.350	4	3	±3.75	10	±25.0	1	2	70	-910 ±10		-20 ~ +70
73SR15B	73.350	4	3	±7.50	10	±25.0	1	2	70	-910 ±10		-20 ~ +70
73SR30B	73.350	4	3	±15.0	10	±25.0	1	2	70	-910 ±10		-20 ~ +70

Note: The above specifications are typical only. Please contact our Sales Department for specific requirements.

Hy-Q

QC44 (UM1)

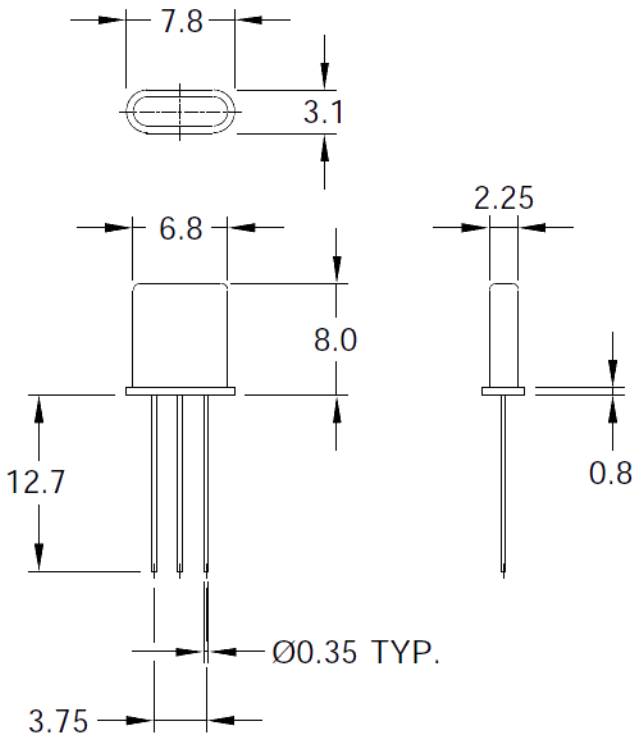

QC53

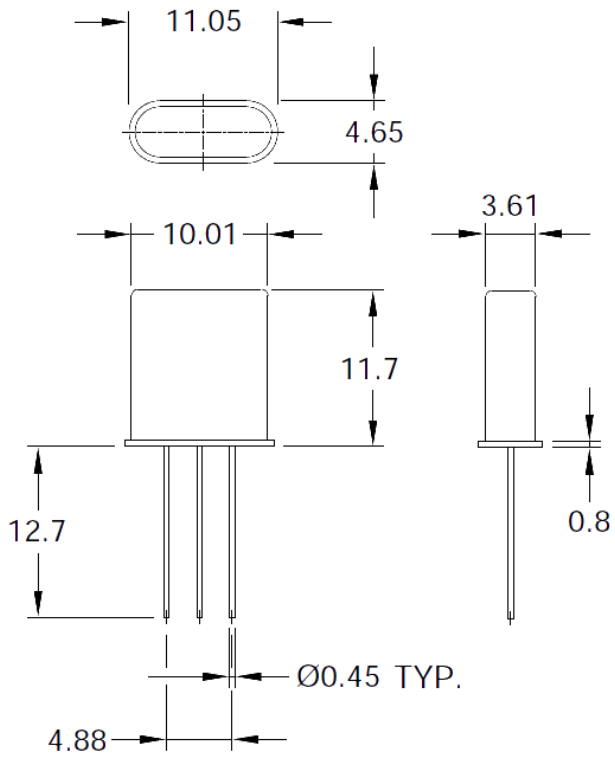

QC59

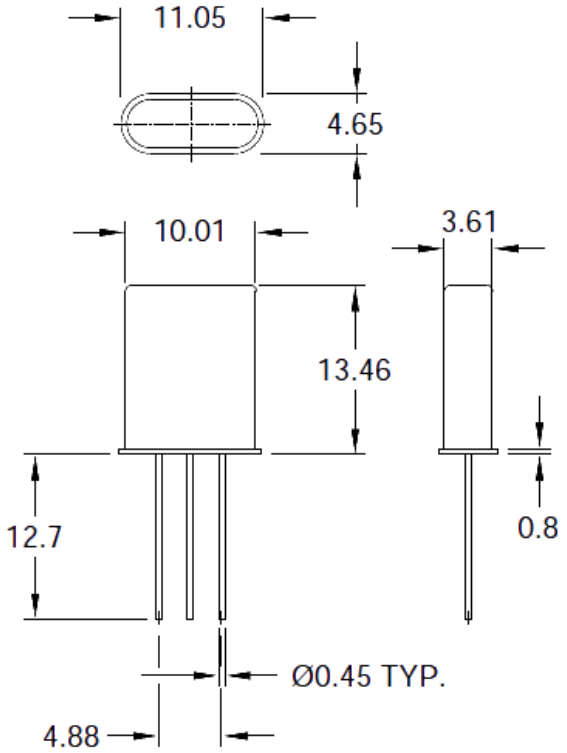

Typical 4 Pole Connection

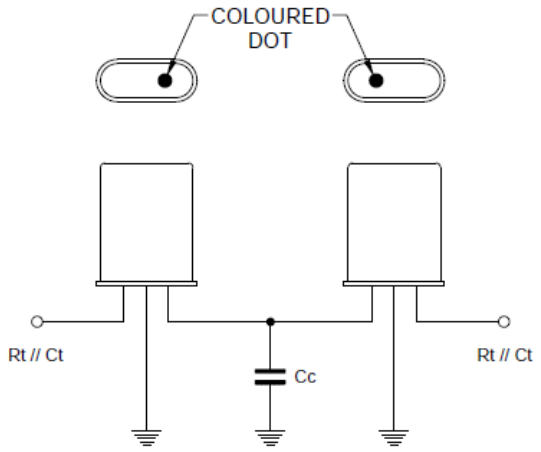

All dimensions are in mm and within manufacturing tolerances.

For full specifications, please refer to our product data sheets on our website

Package Outlines and Dimensions

Hy-Q

QFP3

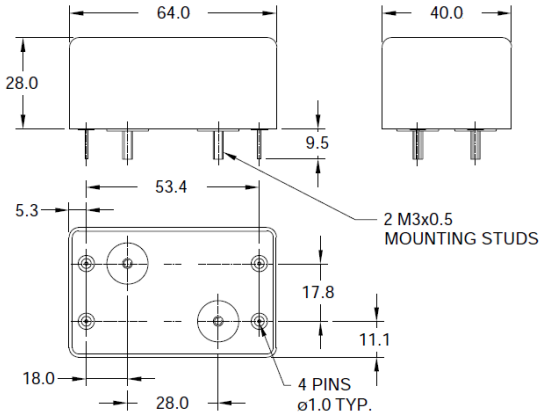

QFP7

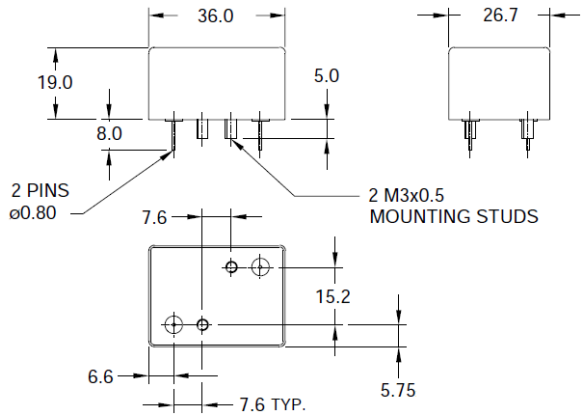

QFP25

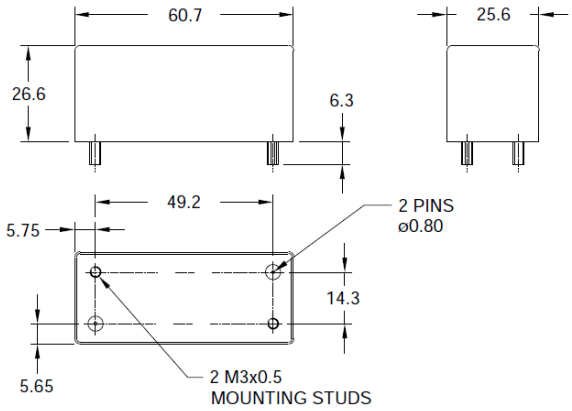

QFP26

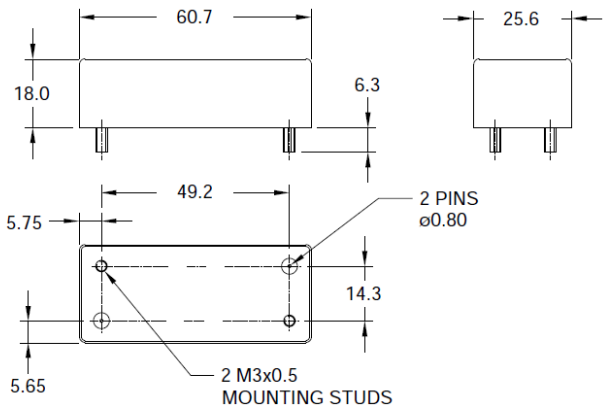

QFP16

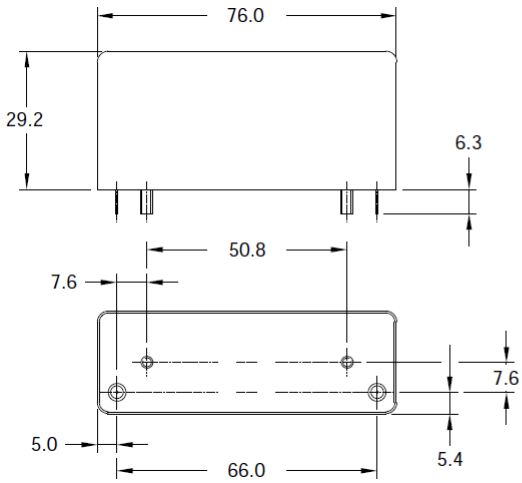

QFP24

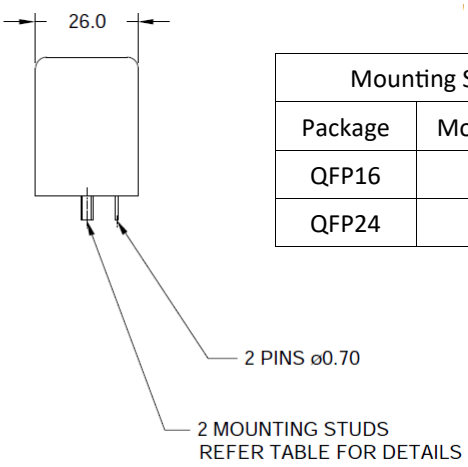

Mounting Stud Details	
Package	Mounting Stud Size
QFP16	M3.4x0.5
QFP24	M4.0x0.7

All dimensions are in mm and within manufacturing tolerances.

For full specifications, please refer to our product data sheets on our website

Package Outlines and Dimensions

Hy-Q

QFP10

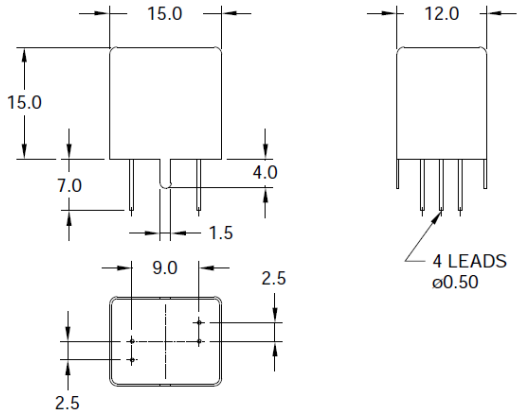

QFP11

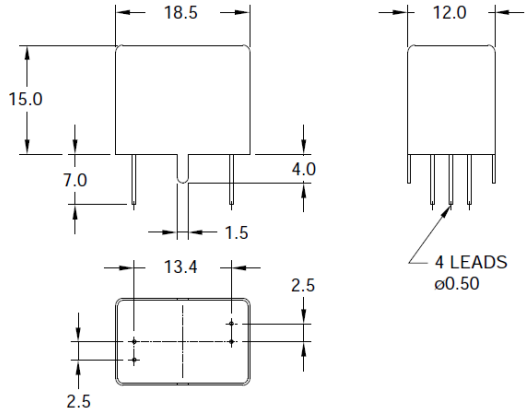

QFP12

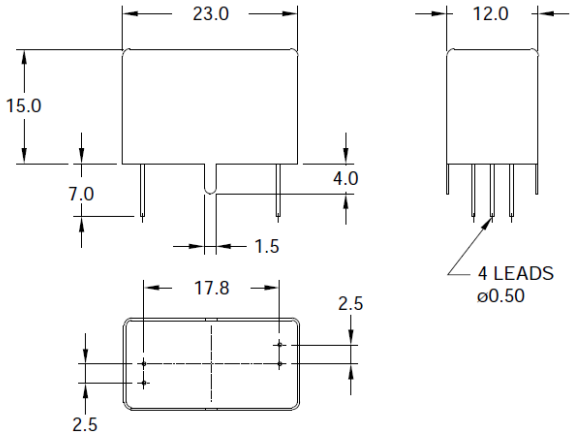

QFP22

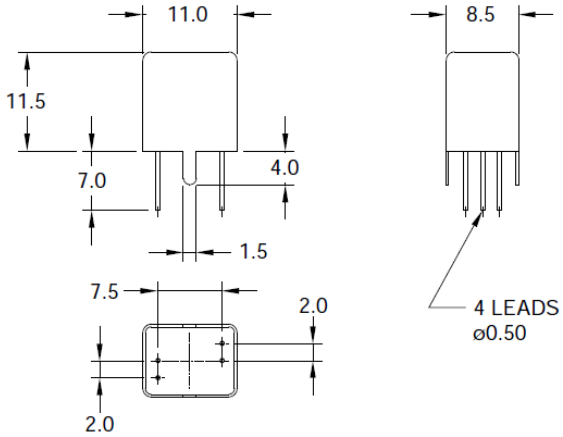

QFP23

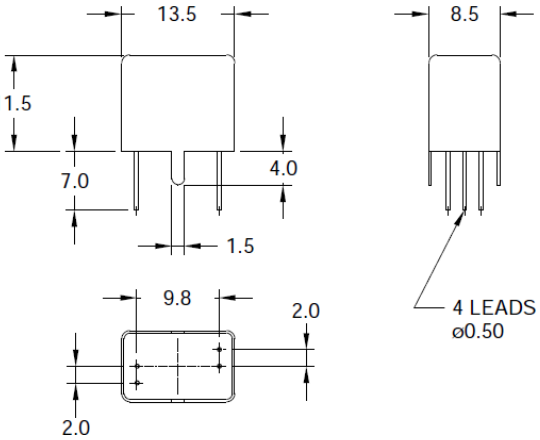

All dimensions are in mm and within manufacturing tolerances.

For full specifications, please refer to our product data sheets on our website

Package Outlines and Dimensions

Hy-Q

QFP9

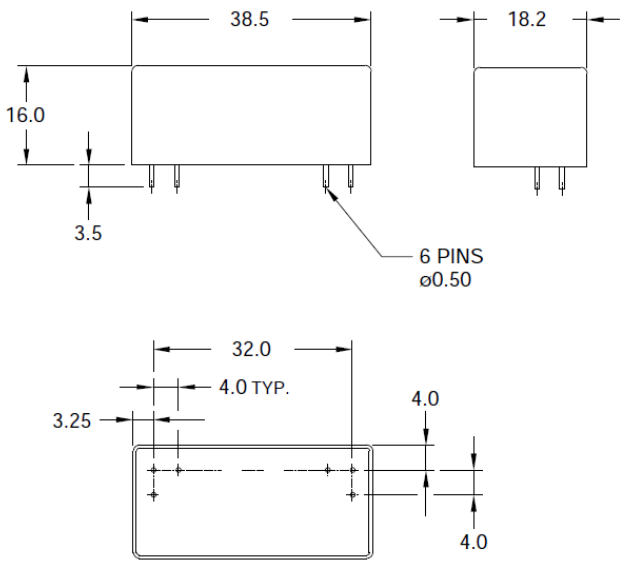

QFP30

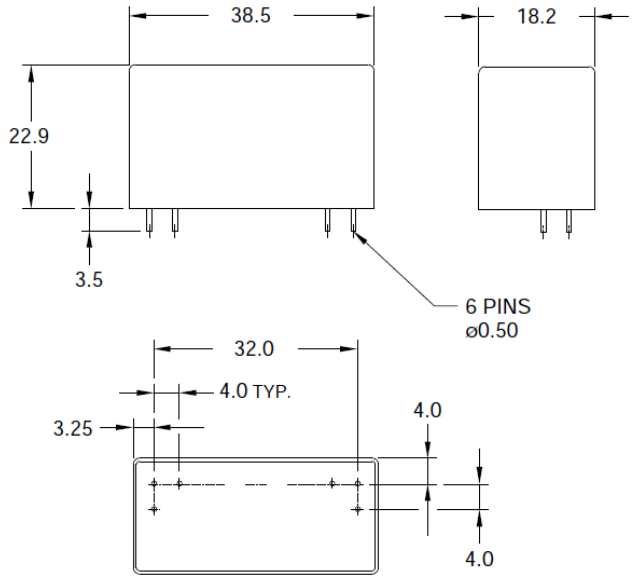

QFP31

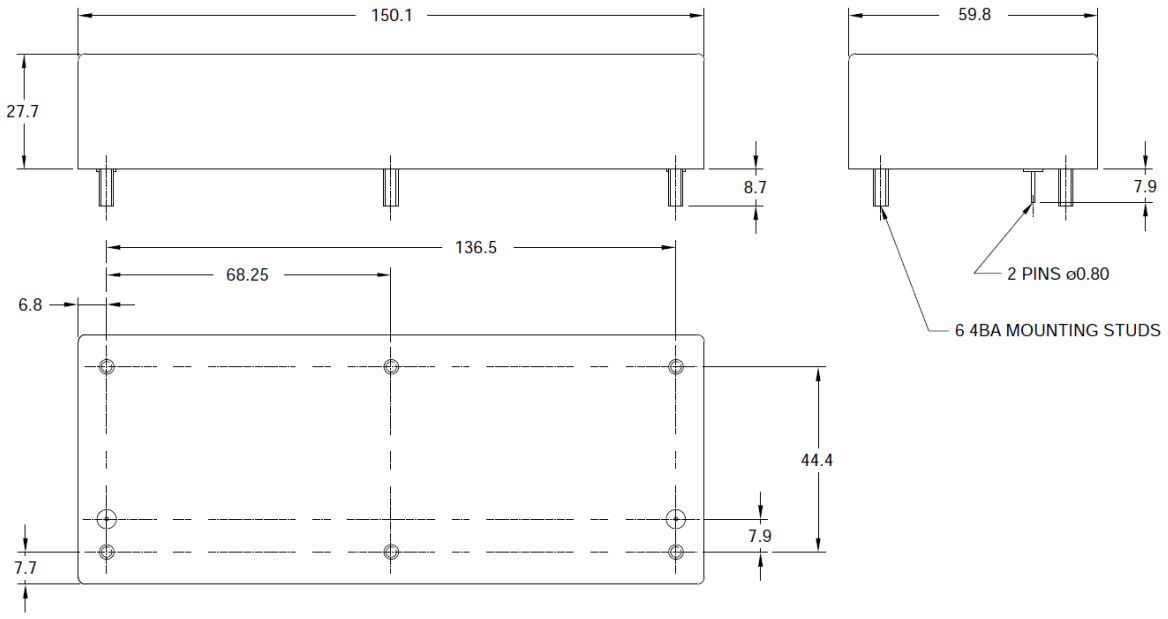

All dimensions are in mm and within manufacturing tolerances.

For full specifications, please refer to our product data sheets on our website

QSMF-1000

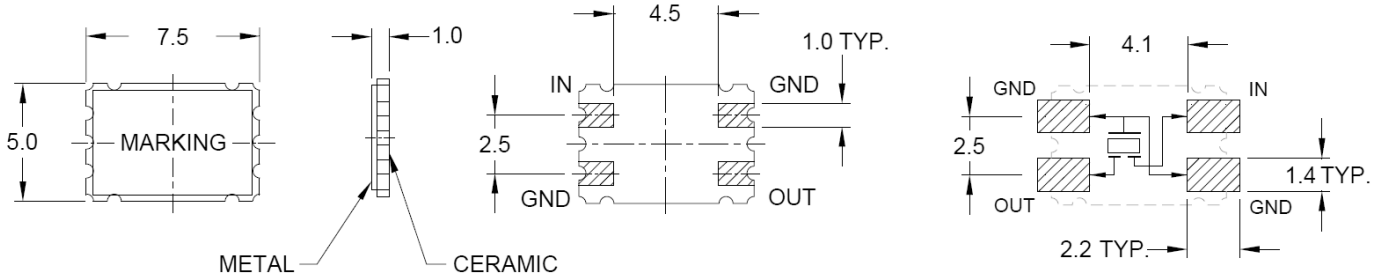

SUGGESTED PAD LAYOUT (TOP VIEW)

QSMF-2000

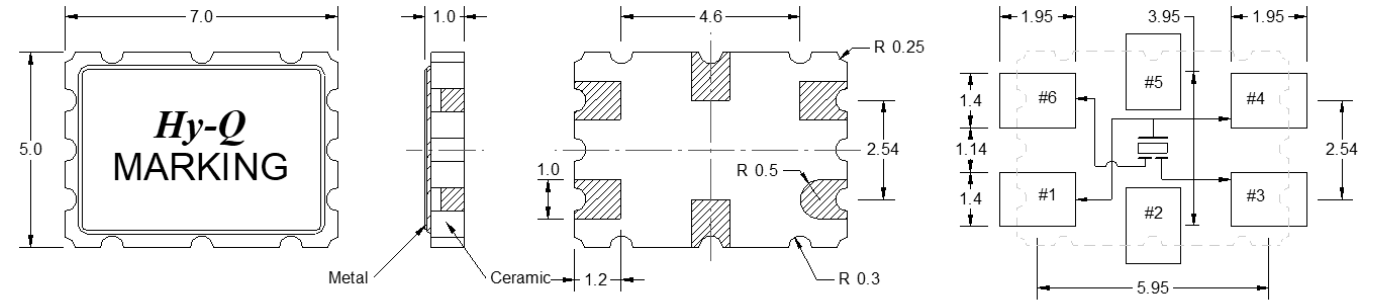

Suggested Pad Layout (Top View)

QSMF-3000

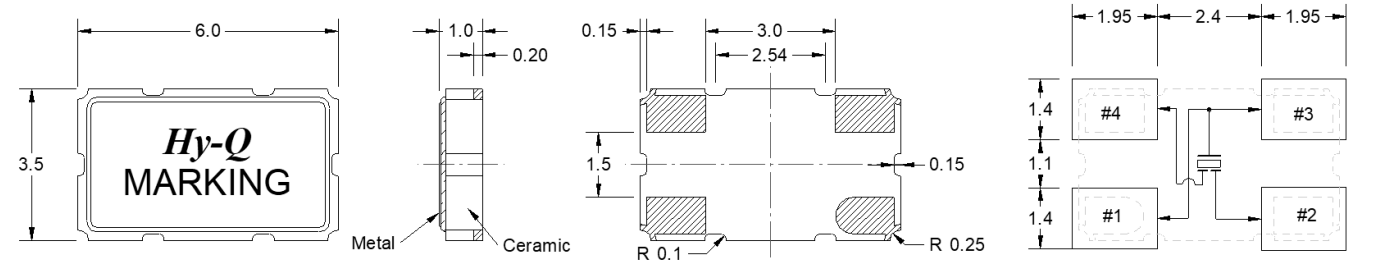

Suggested Pad Layout (Top View)

QSMF-4000

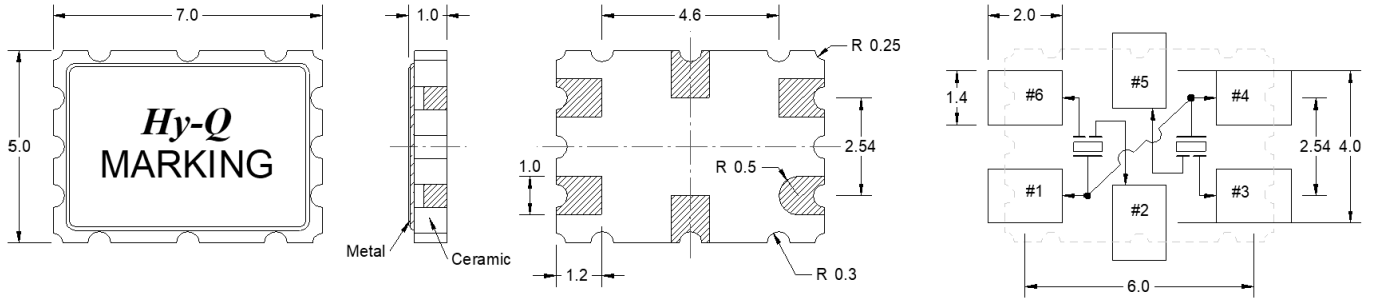

Suggested Pad Layout (Top View)

All dimensions are in mm and within manufacturing tolerances.

For full specifications, please refer to our product data sheets on our website

Hy-Q International

Worldwide manufacturer and distribution of Quartz Crystals, Crystal Filters and Crystal Oscillators.

Hy-Q International is dedicated to the supply of products for frequency management and control systems. The parent company was formed in Australia in 1969 by a group of crystal engineers determined to build a company where excellence of product and reliability of delivery were the prime considerations. This has been, and remains, the cornerstone of the Group policy and took Hy-Q from a single manufacturing company with twenty five employees in 1969 to employing over 400 people on five continents.

Hy-Q International (Australia) Pty. Ltd.
25 Winterton Road
Clayton, Victoria 3168
Australia

Sales:
+61 (03) 9562-8222
sales@hy-q.com.au

Accounts:
+61 (03) 9562-7474
accounts@hy-q.com.au

www.Hy-Q.com.au

Copyright © 2022, Hy-Q International

9 August 2022

Produced by 876 Digital Media