QSMC-2810

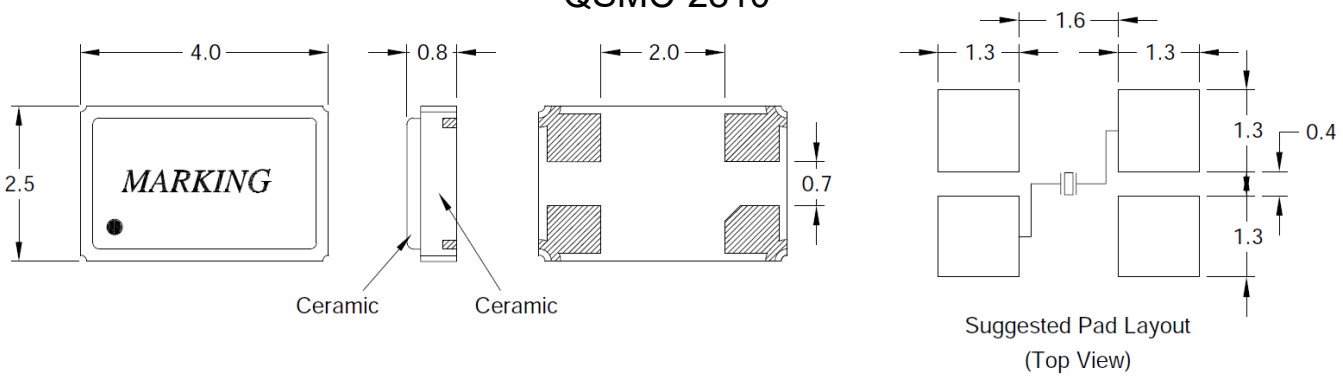

QSMC-2820

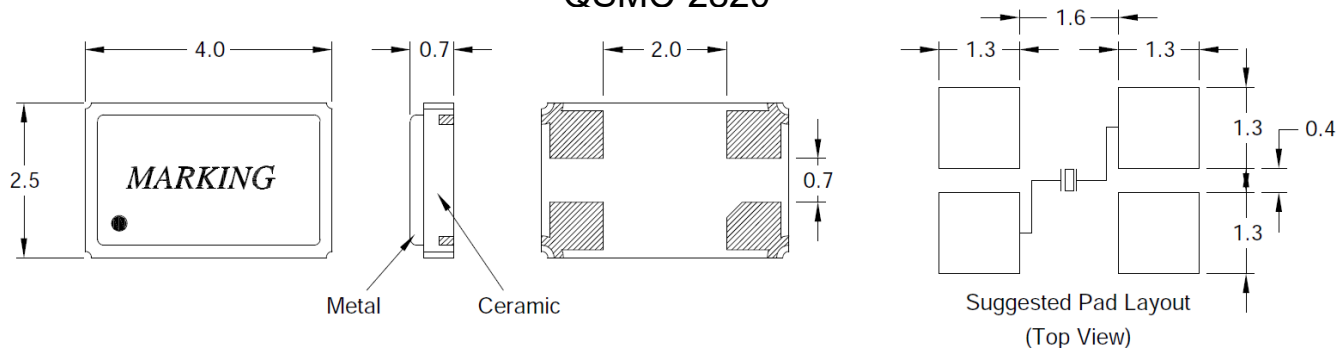

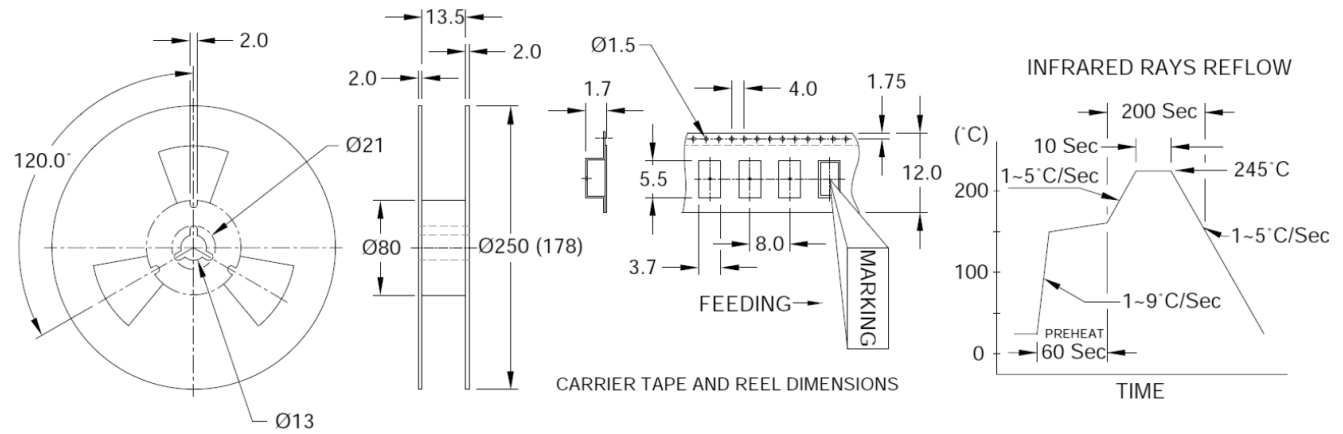

NOTE: End of Life Notice - Please contact our Sales Department

Package	Frequency Range (MHz)	Frequency Tolerance @ 25°C	Frequency Stability (Ref. to 25°C)	Operating Temperature Range
QSMC-2820	13.000 ~ 50.000	±10ppm	±10ppm	-20°C ~ +70°C
QSMC-2810 / 2820		±50ppm	±50ppm	

Frequency Ranges (MHz)	Oscillator Mode	C_L (pF)	Equivalent Series Resistance (ESR)	Drive Level
13.000 ~ 50.000	Fundamental	16, 20, 30	60Ω (2810), 80Ω (2820)	0.1mW

Note: The above specifications are typical only. Please contact our Sales Department if requirements differ.

Hy-Q International (Australia) Pty. Ltd. Telephone: +61 (03) 9562-8222 Email: sales@hy-q.com.au Website: www.hy-q.com.au