Hy-Q International

45 MHz CRYSTAL FILTERS

UM-1

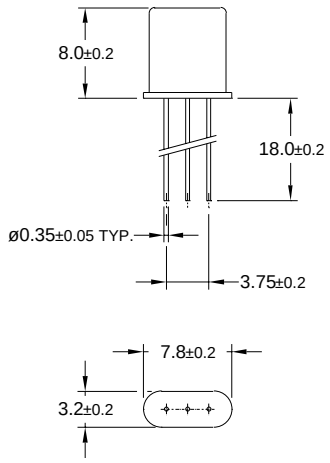

UM-5

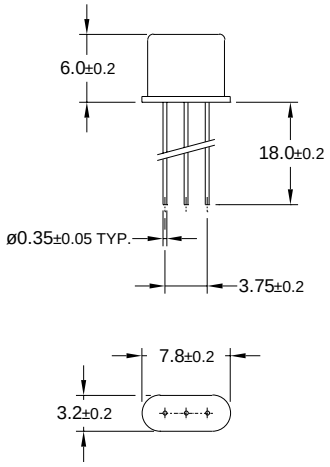

UM-4

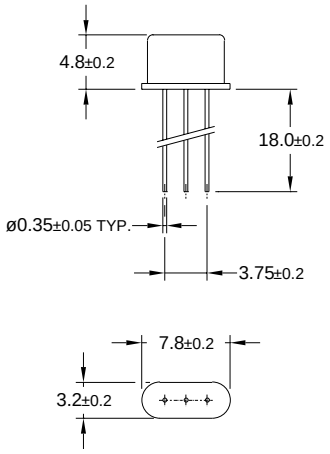

UM-1 SLIM

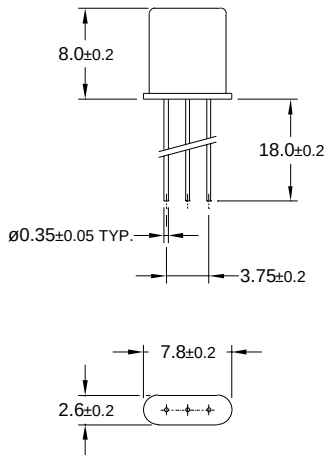

UM-5 SLIM

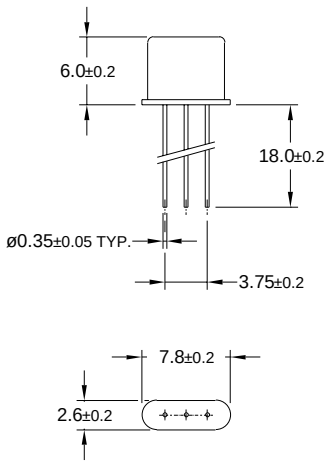

UM-4 SLIM

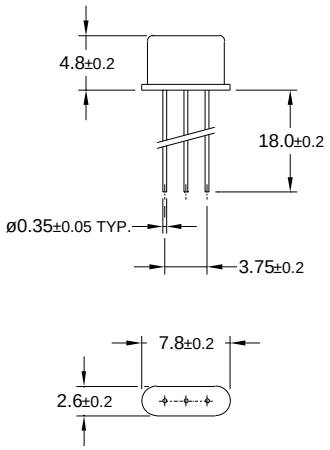

SPECIFICATION 3rd OVERTONE

SERIES No.	NOMINAL FREQUENCY MHz	POLE	PASSBAND		ATTENUATION BAND		RIPPLE MAX. dB	LOSS MAX. dB	ATTENUATION GUARANTEED		TERMINAL IMPEDANCE ohm // pF	OPERATING TEMPERATURE °C	CASE QTY.
			dB	kHz	dB	kHz			dB	FO ~ ±kHz			
45M7A	45.000	2	3	±3.75	10	±12.5	1.0	2.5	35	±910	2500 // -0.5	-20 ~ +70	1
45M7B	45.000	4	3	±3.75	30	±12.5	1.0	4.0	75	±910	2500 // -0.5	-20 ~ +70	2
45M15A	45.000	2	3	±7.5	18	±28.0	1.0	2.0	35	+500 ~ +1000 - 200 ~ -1000	4000 // -1.0	-20 ~ +70	1
45M15B	45.000	4	3	±7.5	40	±30.0	1.0	3.0	70	+500 ~ +1000 - 200 ~ -1000	4000 // -1.0	-20 ~ +70	2
45M20A	45.000	2	3	±10.0	15	±30.0	1.0	2.0	35	+500 ~ +1000 - 200 ~ -1000	5000 // -1.0	-20 ~ +70	1
45M20B	45.000	4	3	±10.0	35	±40.0	1.0	3.0	70	+500 ~ +1000 - 200 ~ -1000	5000 // -1.0	-20 ~ +70	2
45M30A	45.000	2	3	±15.0	15	±50.0	1.0	2.0	30	+500 ~ +1000 - 300 ~ -1000	8000 // -1.0	-20 ~ +70	1
45M30B	45.000	4	3	±15.0	30	±50.0	1.0	3.0	70	+500 ~ +1000 - 300 ~ -1000	8000 // -1.0	-20 ~ +70	2

PLEASE CONTACT OUR SALES DEPARTMENT FOR ADDITIONAL REQUIREMENTS.

REF.No. 1012-0049-00-01 19 AUG 1999

ALL DIMENSIONS AND TOLERANCES ARE IN mm

SPECIFICATION SUBJECT TO CHANGE WITHOUT NOTICE

Hy-Q International (Australia) Pty. Ltd. Telephone +61 (03) 9562 8222 Facsimile +61 (03) 9562 9009 E-Mail sales@hy-q.com.au